CHASSIS, MAIN FRAME AND SKID PLATES - Z26SPD92AN/AH/BN/BH (C750506)

2026 RZR - RZR PRO S ULTIMATE (R01) - Z26SPD92AN/AH/BN/BH

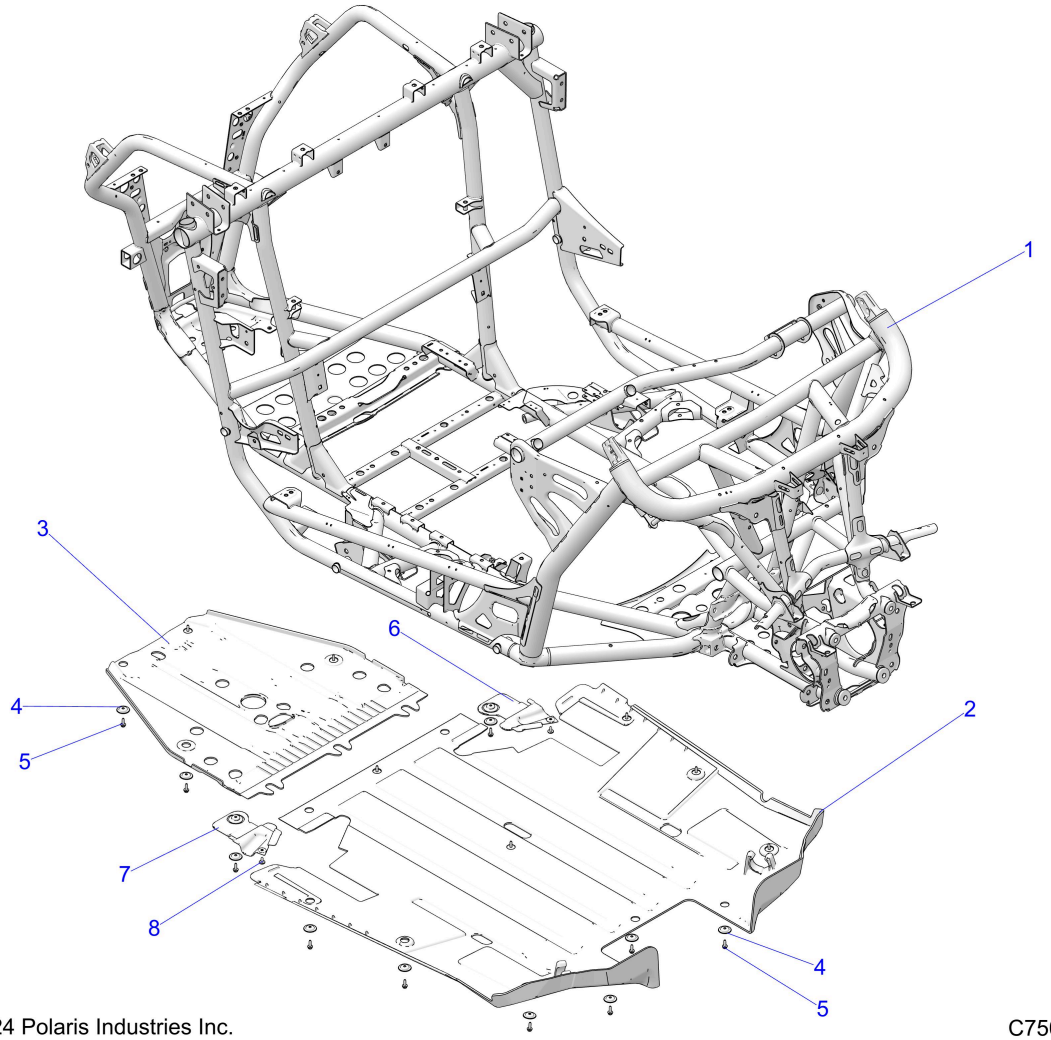

© 2024 Polaris Industries Inc. C750506

Reference #	*Part#*	*Description*	*Quantity*
1	1028547-458	WELD-MAINFRAME,ISO,74,T,BLK	1
2	5456300-070	PLATE-SKID,FRONT,ROUTER,BLK	1
3	5456082-070	PLATE-SKID,REAR,BLK	1
4	7556065	WASHER-SKID PLATE	17
5	7518529	SCR-M6X1.0X20,HXHD,FLG,TDFM,BK	17
6	5456792	PLUG-SKID PLATE,LH	1
7	5456793	PLUG-SKID PLATE,RH	1
8	7518936	SCR-M6X1X16 TR/TX-M	2

Copyright 1996-2026 Polaris Industries U.S.A All rights reserved.